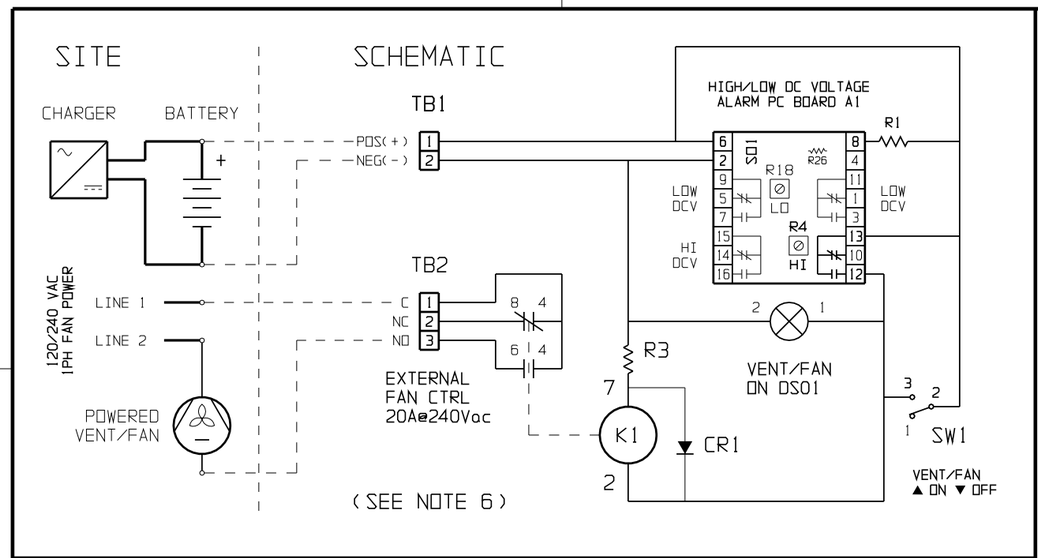

SYM	STANDARD COMPONENT DESCRIPTION
A1	VOLTAGE SENSE CTRL PC BOARD
R4	PCB (A1) HIGH ADJ POTENTIOMETER
R18	PCB (A1) LOW ADJ POTENTIOMETER
R26A1	PCB (A1) VDC RATING RESISTOR
SO1	PCB (A1) WIRING SOCKET
CR1	RELAY (K1) PROTECTION DIODE
DS01	VENT/FAN ON (GREEN) IND LIGHT
K1	POWERED (20A) DPDT CONTACTOR
R1	PCB (A1) P/S BALLAST RESISTOR
R3	EQUALIZE VOLTAGE DROP RESISTOR
SW1	MANUAL (ON/OFF) TOGGLE SWITCH
TB1	DC BUS INPUT TERMINAL BLOCK
TB2	VENT/FAN CONTACT TERMINAL BLOCK

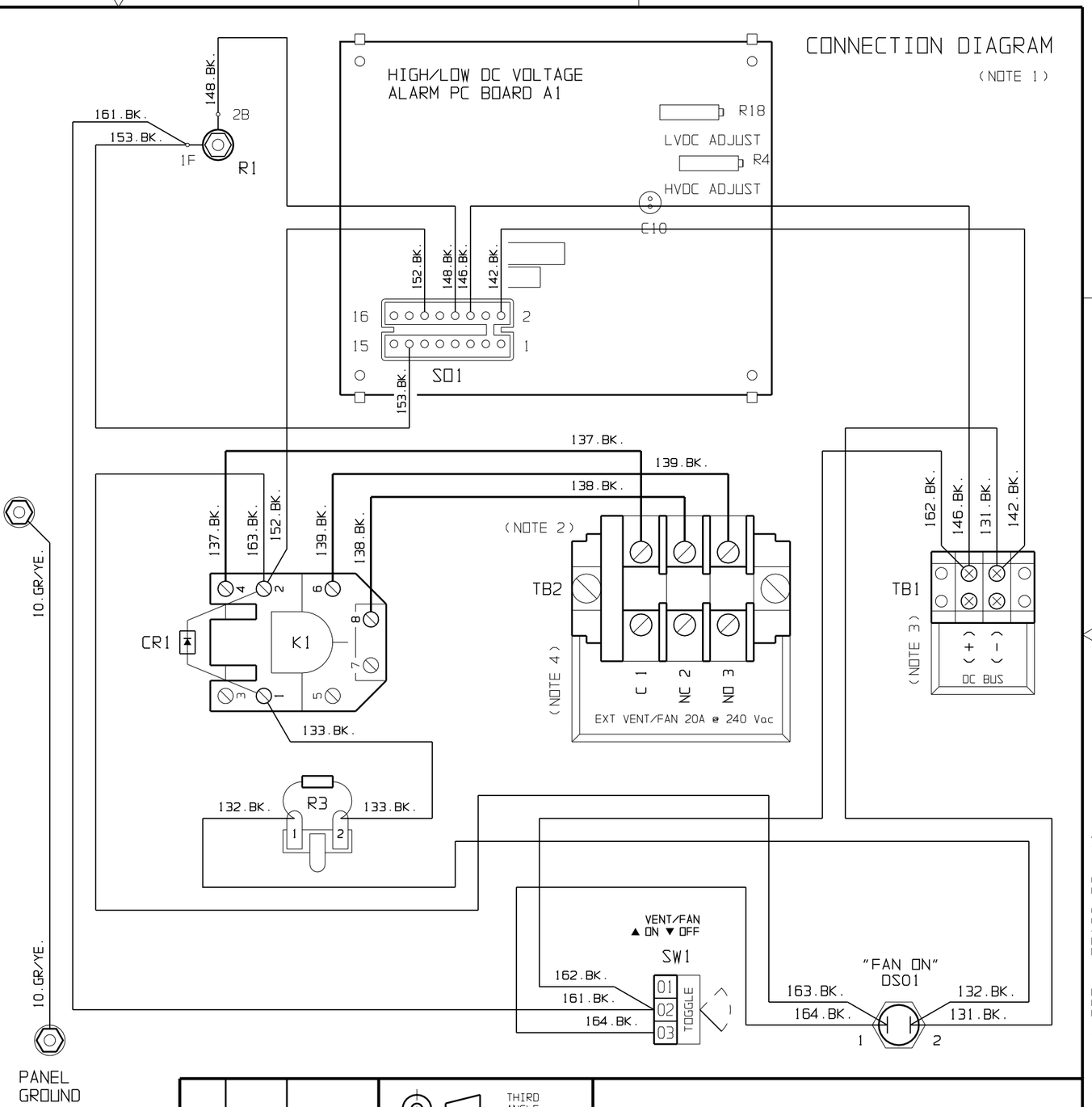

NOTES:

1) COMPONENTS ARE CONNECTED WITH FLAME-RETARDANT SWITCHBOARD INSULATION SYSTEM (SIS) TYPE WIRING, IDENTIFIED ON EACH END WITH NUMBER-CODED MARKERS. GROUND WIRES ARE GREEN WITH YELLOW STRIPE.

2) POWER WIRES # 137, 138 & 139 ARE #12 AWG ALL OTHER SIGNAL WIRING IS #18 AWG

3) TB1 (DC+/-) TERMINAL BLOCK IS MOLDED PHENOLIC BARRIER TYPE WITH 6-32 COMPRESSION SCREWS, ACCEPTING RING OR SPADE LUGS FOR #22-16 AWG WIRE.

4) TB2 (VENT/FAN) TERMINAL BLOCK IS NYLON SECTIONAL TYPE WITH TUBULAR COMPRESSION SCREWS, ACCEPTING #18-8 AWG WIRE.

5) VENT/FAN CONTROL ASSEMBLY IS NOT A UL, CSA, CE, OR NRTL LISTED UNIT.

6) SEE JA5052-10 FOR INSTALLATION & OPERATING INSTRUCTIONS.

REV	ECN No	DATE
C	-N/A-	012121
B	-N/A-	111220
A	-N/A-	102319

THIRD ANGLE PROJECTION

DRAWN BY MCR 102319

ELECTRONIC APPROVAL SIGNATURES MAINTAINED BY MFG ECN LOG

UNLESS OTHERWISE NOTED DIMENSIONS ARE IN INCHES. TOLERANCES ARE:

TITLE EXTERNAL VENT/FAN CTRL ASSY (EJ5017-36) SCHEMATIC / CONN DIAGRAM: 20Aac / 130Vdc

DRAWING No JE5120-36 REV C **B**

SCALE NTS PART No JE5120-36 SHEET 1 OF 1

FILENAME [JE5120-36.RevA.prt]

http://www.ATSeries.net/PDFs/JE5120-36.pdf